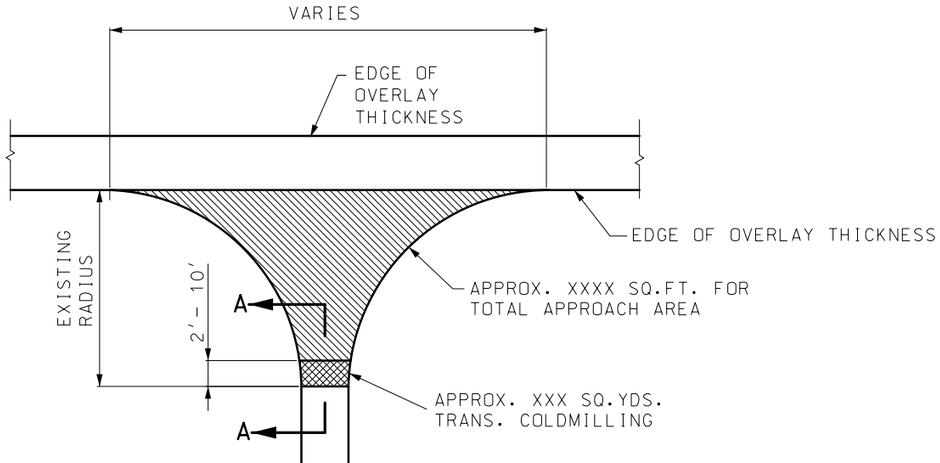

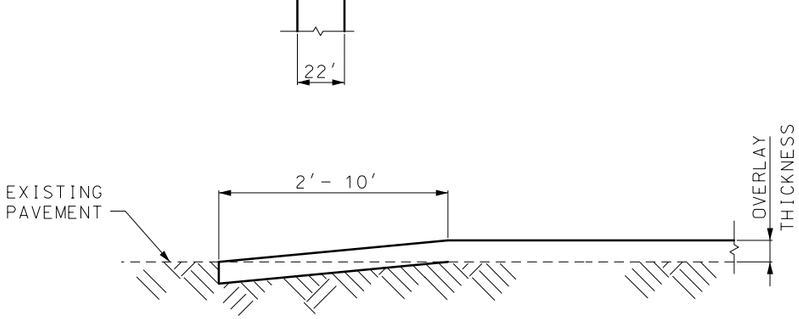

SECTION A-A
TYPICAL STATE ROUTE JUNCTION
(COLDMILLED TRANSITION)

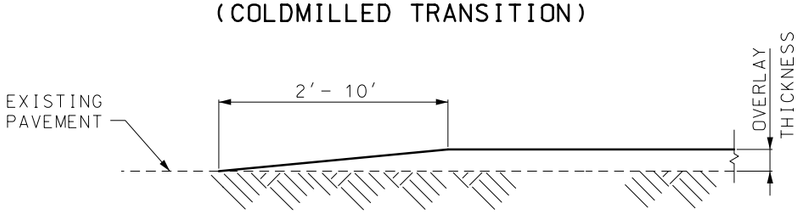

ALTERNATE SECTION A-A
TYPICAL STATE ROUTE JUNCTION
(TAPERED TRANSITION)

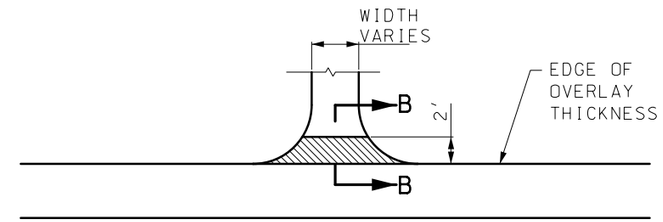

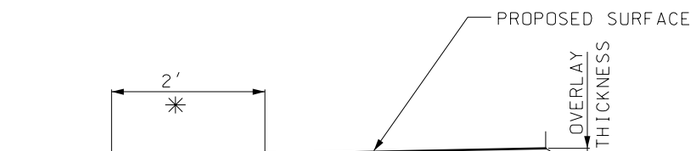

SECTION B-B

TYPICAL ENTRANCE
(FIELD, PRIVATE OR COUNTY ROAD)
*TAPER AT 1:1 FOR FIELD ENTRANCE

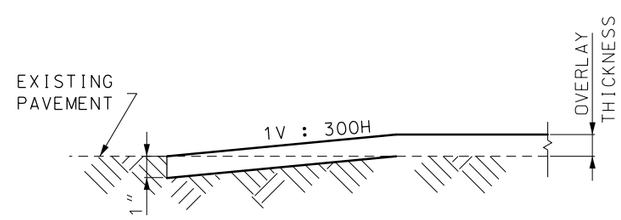

TRAVELWAY DEPTH TRANSITIONS
BEGINNING AND END OF PROJECT
AND EXCEPTIONS

SPECIAL SHEET
1 OF 1

"THIS MEDIA SHOULD NOT BE CONSIDERED A CERTIFIED DOCUMENT."

DATE PREPARED	
10/20/2015	
ROUTE	STATE MO
DISTRICT	SHEET NO. 4
COUNTY	
JOB NO.	
CONTRACT ID.	
PROJECT NO.	
BRIDGE NO.	

DESCRIPTION	DATE

MISSOURI HIGHWAYS AND TRANSPORTATION COMMISSION
105 WEST CAPITOL
JEFFERSON CITY, MO 65102
1-888-ASK-MODOT (1-888-275-6636)

IF A SEAL IS PRESENT ON THIS SHEET IT HAS BEEN ELECTRONICALLY SEALED AND DATED.