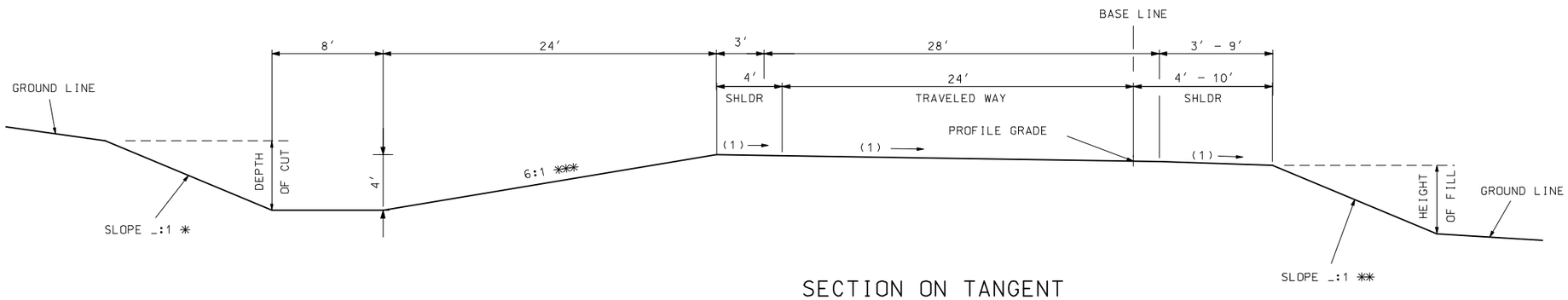


## SECTION ON TANGENT
TYPICAL SECTION RTE. XX
STA. XXX.XX TO STA. XXX.XX

CROSS SLOPE

(1) 2.0%
(2) S.E. SLOPE IF GREATER THAN 2.0%.

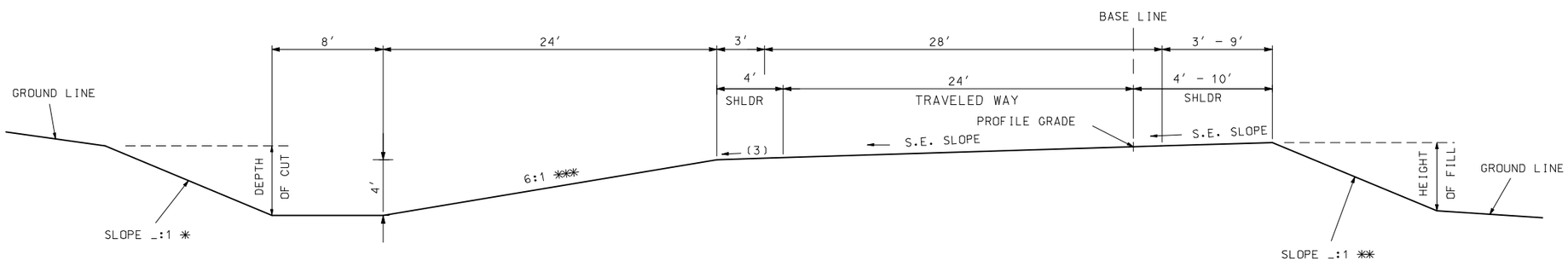


## SECTION ON SUPERELEVATED CURVE
TYPICAL SECTION RTE. XX
STA. XXX.XX TO STA. XXX.XX

* BACKSLOPE DETERMINED BY SOIL SURVEY.

** THE FILL SLOPE SHALL BE 6:1 OR FLATTER WHEN THE FILL HEIGHT IS EQUAL TO OR LESS THAN 4 FEET (i.e. THE OFFSET FROM THE TOE OF FILL TO THE SHOULDER POINT IS A MINIMUM OF 24 FEET). THE SLOPE MAY VARY TO MEET THIS REQUIREMENT. FOR FILL HEIGHTS GREATER THAN 4 FEET, THE SLOPE SHALL NOT EXCEED THE MAXIMUM SLOPE DETERMINED BY THE SOIL SURVEY.

*** WHEN CROSS ROAD GOES OVER MAIN ROADWAY, A VARIABLE SLOPE SHALL BE USED FROM RAMP SHOULDER TO MAIN ROADWAY DITCH POINT.

| D-53G | |
|---|---|
| FUNCTION | MULTI-LANE RAMP |
| ADT | ALL |
| TRAVELED WAY WIDTH | 24′ |
| ROADBED WIDTH | 32′ – 38′ |
| FORESLOPE | 6:1 |
| DITCH | 4′ |

DATE PREPARED
09/29/2008

| ROUTE | STATE |
|---|---|
| | MO |
| DISTRICT | SHEET NO. |

COUNTY

JOB NO.

CONTRACT ID.

PROJECT NO.

BRIDGE NO.

| DESCRIPTION | DATE |
|---|---|
| | |

MISSOURI HIGHWAYS AND TRANSPORTATION COMMISSION
105 WEST CAPITOL
JEFFERSON CITY, MO 65102
1-888-ASK-MODOT (1-888-275-6636)