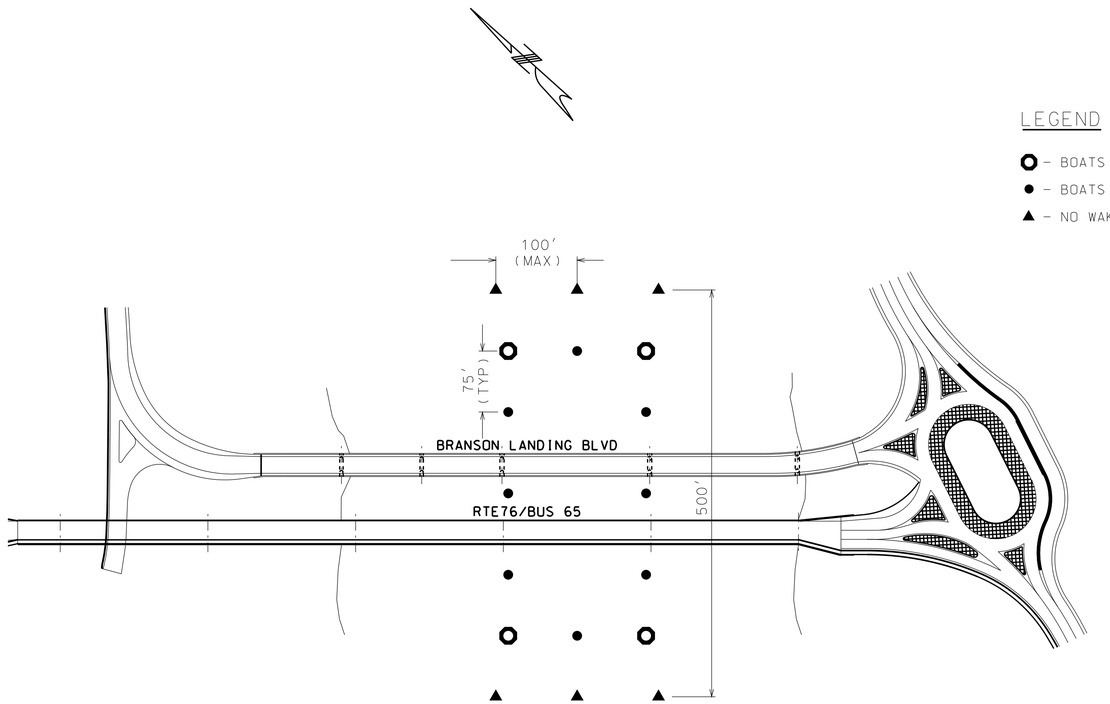

LEGEND

- O – BOATS KEEP OUT (SIGN)
- ● – BOATS KEEP OUT (BUOY)
- ▲ – NO WAKE (BUOY)

NOTES:

1. INFORMATION SHOWN IS SCHEMATIC ONLY. FINAL LOCATION AND NUMBER OF SIGNS AND BUOYS IS SUBJECT TO APPROVAL OF MISSOURI STATE WATER PATROL

2. THE DETAILS SHOWN ARE FOR BIDDING PURPOSES ONLY. ALL MATERIALS AND LABOR NECESSARY TO INSTALL AND REMOVE SIGNS SHALL BE INCIDENTAL TO OTHER ITEMS

3. THE CONTRACTOR IS RESPONSIBLE FOR BUOY MAINTENANCE THROUGHOUT CONSTRUCTION AND FOR DETERMINING ANTICIPATED WATER LEVELS DURING CONSTRUCTION. EACH SIGN AND BUOY SHALL BE ANCHORED TO BOTTOM OF LAKE.

4. SIGNS SHALL BE DOUBLE FACED

5. EACH SIGN SHALL BE EQUIPPED WITH TWO (2) FLASHING LIGHT UNITS WITH AMBER LENS. FLASHING LIGHT UNITS SHALL BE FURNISHED AND MAINTAINED BY THE CONTRACTOR

6. ALL LETTERING TO BE BLACK IN COLOR IN BLOCK FORM.

7. FOR OTHER INFORMATION AND LOCATION OF SIGNS AND BUOYS SEE SPECIAL PROVISIONS.

8. SCHEMATIC SHOWN IS FOR ONE NAVIGATIONAL SPAN. FOR WORK ON OTHER SPANS MOVE APPROPRIATE SIGNS WITH NO DIRECT PAY

COLOR: BACKGROUND – WHITE
LEGEND – BLACK
2" REFLECTIVE BAND AND SYMBOL – INTERNATIONAL ORANGE

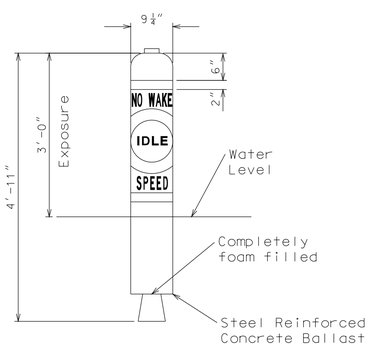

51 lb Anchor
Tackle Permitted

RESTRICTED AREA BUOY

("NO WAKE")

(6 Required – Roadway Item)

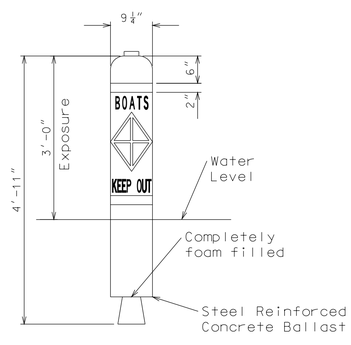

51 lb Anchor
Tackle Permitted

CONTROLLED AREA BUOY

("BOATS KEEP OUT")

(8 Required – Roadway Item)

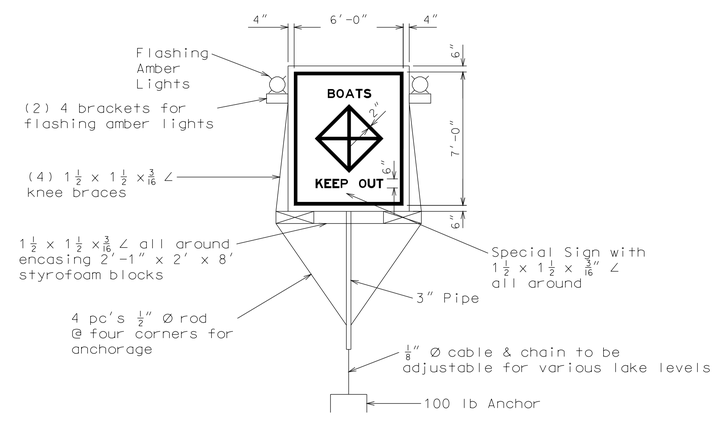

SPECIAL SIGN ASSEMBLY

(4 Required – Roadway Item)

TRAFFIC CONTROL
BOAT TRAFFIC
SHEET 3 OF 13

STATE OF MISSOURI
CHAD E. ZICKEFOOSE
NUMBER PE-29682
PROFESSIONAL ENGINEER

THIS SHEET HAS BEEN SIGNED, SEALED AND DATED ELECTRONICALLY.

DATE PREPARED	
8/13/2009	
ROUTE 76	STATE MO
DISTRICT 8	SHEET NO. TC3
COUNTY TANEY	
JOB NO. J8P0799	
CONTRACT ID.	
PROJECT NO.	
BRIDGE NO.	

DATE	DESCRIPTION

MISSOURI HIGHWAYS AND TRANSPORTATION COMMISSION
105 WEST CAPITOL
JEFFERSON CITY, MO 65102
1-888-ASK-MODOT (1-888-275-6636)

IF A SEAL IS PRESENT ON THIS SHEET IT HAS BEEN ELECTRONICALLY SEALED AND DATED.

REV.